Data communication on a multi-core embedded system

Graduate

Noah Kälin

Introduction: The nRF5340 is a dual-core System on Chip (SoC) with two Arm Cortex-M33 cores targeted towards complex Internet of things (IoT) applications. One of the two cores is intended to be used for networking related tasks while the other is available to the user application.
The networking core's designated use case is to run software stacks for wireless protocols which exchange incoming and outgoing data with the second core via shared memory. Alternative setups are conceivable and supported by the hardware, but there is no support on the software side.

Objective: The goal is to be able to receive and store an update of the user application without its runtime behavior being affected, which is not given when the default setup described above is used. This is useful in situations where the user application has hard real-time constraints it must adhere to.
Therefore, the networking core needs to receive the update data and store it in a specific flash memory area of the other core without the intervention of the user application. This specific flash memory area needs to be one from which the user application can be directly booted.

Conclusion: Using a demonstrator, it can be shown that it is possible to receive a user application update over Bluetooth Low Energy (BLE) using the networking core and store it in the correct flash memory area of the user application core. On the next reboot, the update is loaded and run as the new user application.
However, due to hardware-related limitations, the runtime behavior of the user application is still affected. Measurements are performed to assess the resulting impact on the user application. There are potential methods to overcome the limitations, but these can lead to considerable additional effort in development.

High-level demonstrator setup
nRF5340 DK Hardware User Guide v2.0.0/Own presentment

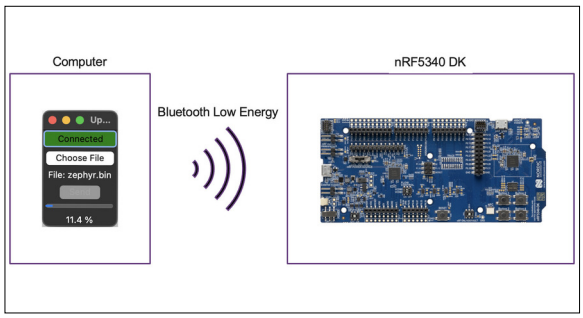

Lower-level demonstrator setup
Own presentment

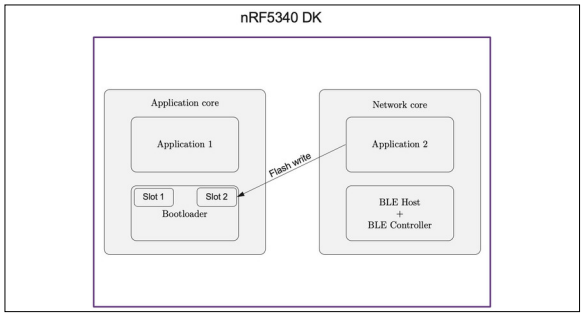

Simplified block diagram of nRF5340
nRF5340 Product Specification v1.3

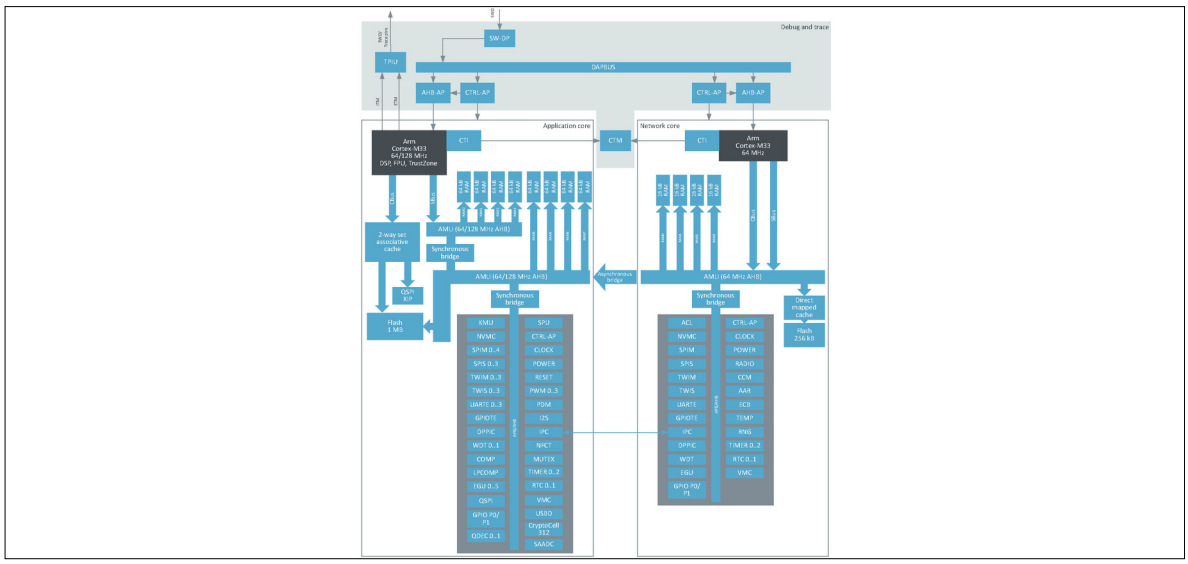

Advisor
Prof. Reto Bonderer

Co-Examiner
Urs Reidt, Hamilton Medical AG, Bonaduz, GR

Subject Area
Electrical Engineering

Project Partner
ABB Schweiz AG, Baden-Dättwil, AG